Gear and Sleeve Shaft Couplings

Great for applications with axial misalignment, All of these couplings have ANSI keyways for a more secure hold. Steel hub and steel sleeve models have a flexible gear design, which allows the most efficient transfer of power available in any coupling. Lubrication is required. Suitable for most applications. Great simplicity allows inexpensive adaptation to a wide variety of special types.

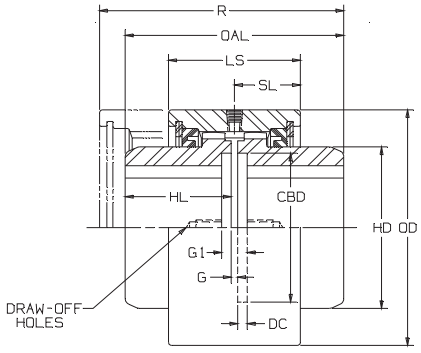

▶ Features

- Simple and inexpensive type of gear coupling. All steel sleves and hubs.
- Reinforced rubber seals with snap rings to hold lubricant in place.
- Available as vertical and horizontal couplings.
- Wide variety of special variations such as full-flex, Flex-rigid mill motor.
- Standard configurations are available of the shelf.

▶ When Ordering, Please Specify

1. Required inside diameter of both hubs, With tolerances.
2. Sizes of keyways, If desired. Set screws not supplied unless sqeeified.
3. Speed and horsepower of driving unit.

Number	Price ฿	Size	Torque (in-lb)	Max. Speed Unbal (RPM)	Max. Bore sq.Key (mm)	Min. Bore (mm)	OAL	OD	HD	HL	LS	R
11M0 1999	—	7/8”	2,520	6,000	31.75	11.17	3.13	3.31	2	1.5	2	3.75
11M0 2000	—	1 1/2”	7,560	5,000	41.27	16.00	3.75	3.75	2.38	1.81	2.53	4.59
11M0 2001	—	2”	20,160	4,200	53.97	18.54	4.25	4.75	3.25	2.06	2.56	4.88
11M0 2002	—	2 1/2”	30,240	3,750	66.67	22.35	4.75	5.5	3.94	2.25	3.06	5.72
11M0 2003	—	3”	50,400	3,000	79.39	30.22	5.5	6.63	4.75	2.63	3.75	6.88
11M0 2004	—	3/12”	88,200	2,800	92.07	31.75	8.75	7.5	5.38	4.25	4	9.25
11M0 2005	—	4”	126,000	2,400	104.77	44.45	9.0	8.75	6.25	4.38	4.63	9.5
11M0 2006	—	4 1/2”	183,960	2,200	120.65	60.45	10.25	9.5	7.25	5	4.88	10.38
11M0 2007	—	5”	270,900	2,100	146.05	73.15	12.25	10.75	8.25	6	5.75	12.25

Flexble Coupling Pulley (Flex-E-Grip)

BERG

- Pin to pin phase adjustment.
- Silent operation.
- Shaft to shaft couplings.
- Minimal backlash.
- Acid and chemical resistant.
- No lubrication required.
- Quick disconnect. Cushioned drive.
- Simple assembly and disassembly.
- Shaft to shaft synchronization.
- Temperature Range : -53º to 82 C.

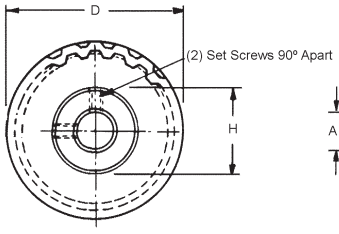

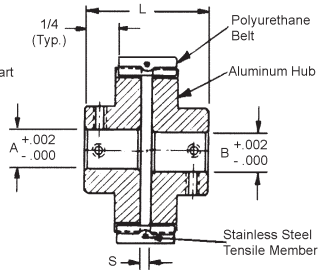

Bore - 1/8” to 1/2”

Material - Polyurethane with Anodized Aluminum Hubs

Number	Price ฿	Mfr's	Bores A & B	D	H	L	S	Maximum		
								Angular Misalign	Shaft Misalign	Torque (In lbs.)
920C 0001	—	CC9-20-2	0.125	0.56	1/2"	5/8"	3/64"	3°	0.005	25
920C 0002	—	CC9-20-3	0.188	0.56	1/2"	5/8"	3/64"	3°	0.005	25
920C 0003	—	CC9-20-4	0.250	0.56	1/2"	5/8"	3/64"	3°	0.005	25
920C 0004	—	CC9-40-2	0.125	1.08	1/2"	5/8"	3/64"	4°	0.006	50
920C 0005	—	CC9-40-3	0.188	1.08	1/2"	5/8"	3/64"	4°	0.006	50
920C 0006	—	CC9-40-4	0.250	1.08	1/2"	5/8"	3/64"	4°	0.006	50
920C 0007	—	CC9-60-2	0.125	1.60	1/2"	5/8"	3/64"	5°	0.008	100
920C 0008	—	CC9-60-3	0.188	1.60	1/2"	5/8"	3/64"	5°	0.008	100
920C 0009	—	CC9-60-4	0.250	1.60	1/2"	5/8"	3/64"	5°	0.008	100
920C 0010	—	CC9-120-2	0.125	3.16	1/2"	5/8"	3/64"	6°	0.010	150
920C 0011	—	CC9-120-3	0.188	3.16	1/2"	5/8"	3/64"	6°	0.010	150